Regulator Design

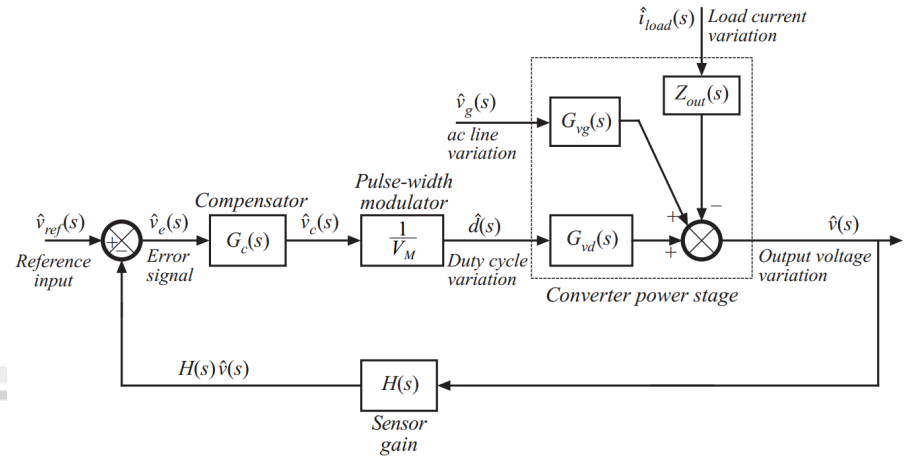

Typical specifications:

1. • Effect of load current variations on output voltage regulation

   This is a limit on the maximum allowable output impedance

2. • Effect of input voltage variations on the output voltage regulation

   This limits the maximum allowable line-to-output transfer function

3. • Transient response time

   This requires a sufficiently high crossover frequency

4. • Overshoot and ringing

   An adequate phase margin must be obtained

The regulator design problem: add compensator network $G_c(s)$ to modify $T(s)$ such that all specifications are met.

9.5.1. Lead (PD) compensator

$$G_c(s) = G_{c0} \frac{\left(1 + \frac{s}{\omega_z}\right)}{\left(1 + \frac{s}{\omega_p}\right)}$$

Improves phase margin

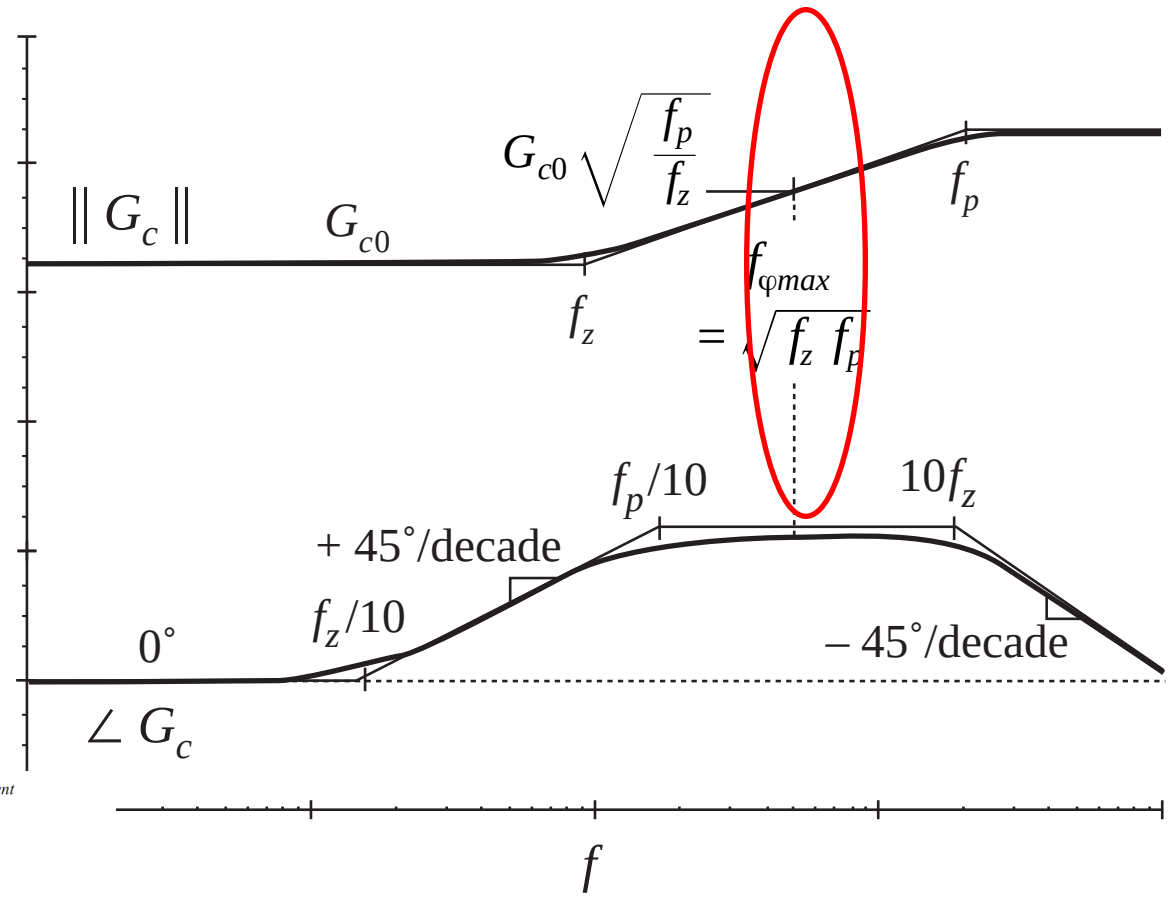

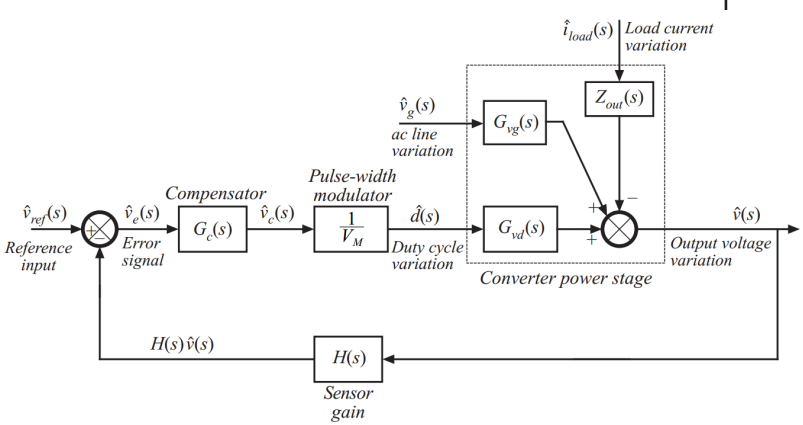

Lead compensator: maximum phase lead

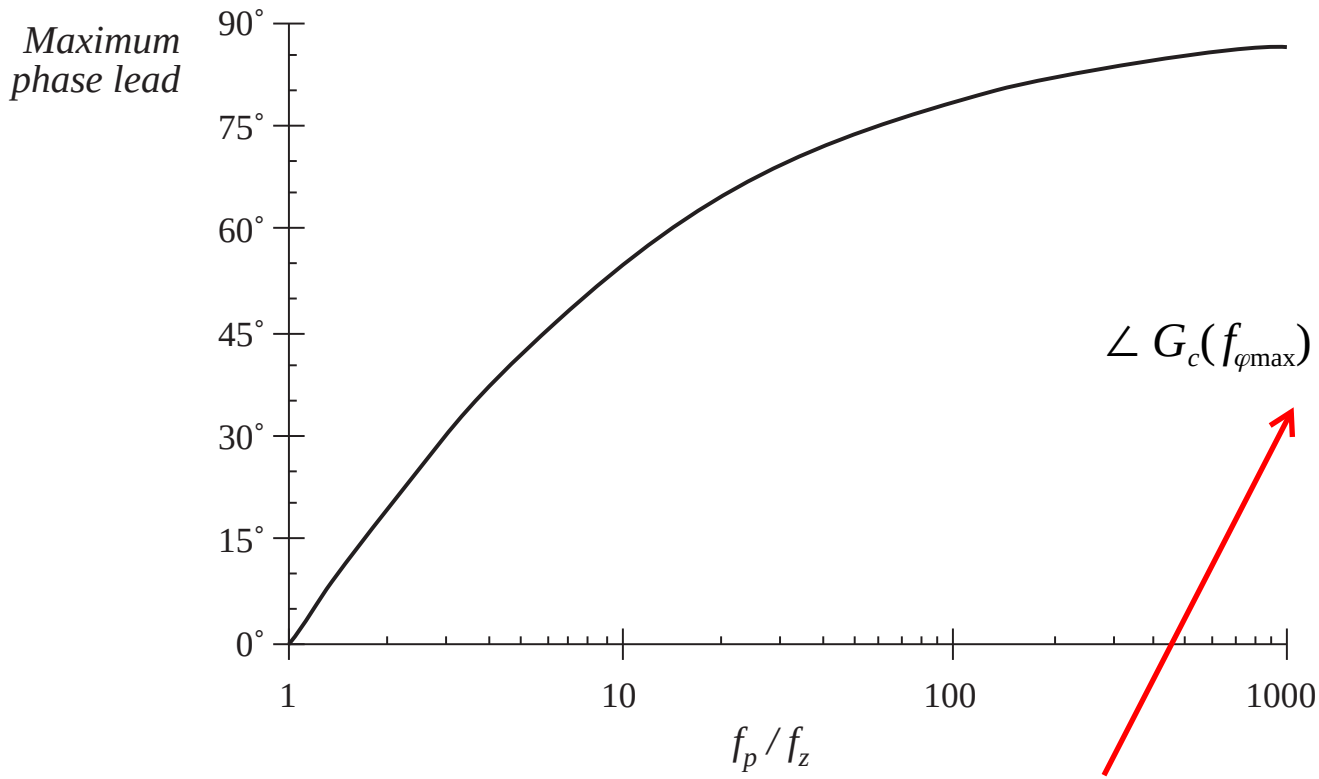

$$f_{\varphi\max} = \sqrt{f_z f_p}$$

$$\angle G_c(f_{\varphi\max}) = \tan^{-1}\left(\frac{\sqrt{\frac{f_p}{f_z}} - \sqrt{\frac{f_z}{f_p}}}{2}\right)$$

$$\frac{f_p}{f_z} = \frac{1 + \sin(\theta)}{1 - \sin(\theta)}$$

$$\arctan x + \arctan y = \arctan\frac{x+y}{1-xy} + \begin{cases} \pi, & \text{if } x, y > 0 \\ -\pi, & \text{if } x, y < 0 \\ 0, & \text{otherwise} \end{cases}$$

Lead compensator design

Target:

To optimally obtain a compensator phase lead of θ at frequency f_c, the pole and zero frequencies should be chosen as follows:

$$\boxed{\frac{f_p}{f_z} = \frac{1 + \sin(\theta)}{1 - \sin(\theta)}}$$

$$f_z = f_c \sqrt{\frac{1 - \sin(\theta)}{1 + \sin(\theta)}}$$

$$f_p = f_c \sqrt{\frac{1 + \sin(\theta)}{1 - \sin(\theta)}}$$

$f_c = \mathrm{sqrt}(f_z f_p)$

If it is desired that the magnitude of the compensator gain at f_c be unity, then G_{c0} should be chosen as

$$G_{c0} = \sqrt{\frac{f_z}{f_p}}$$

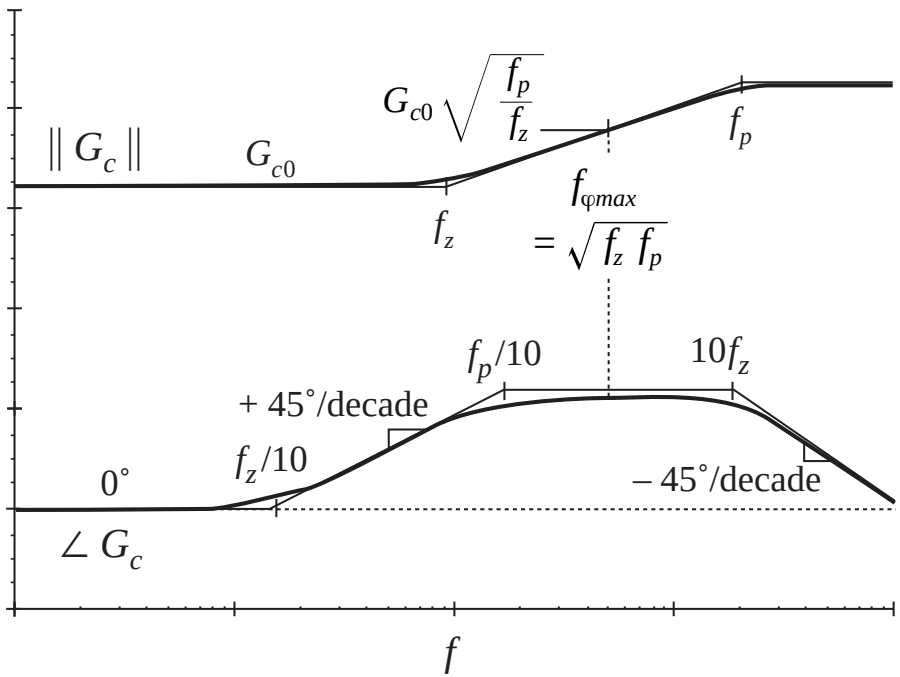

Example: lead compensation

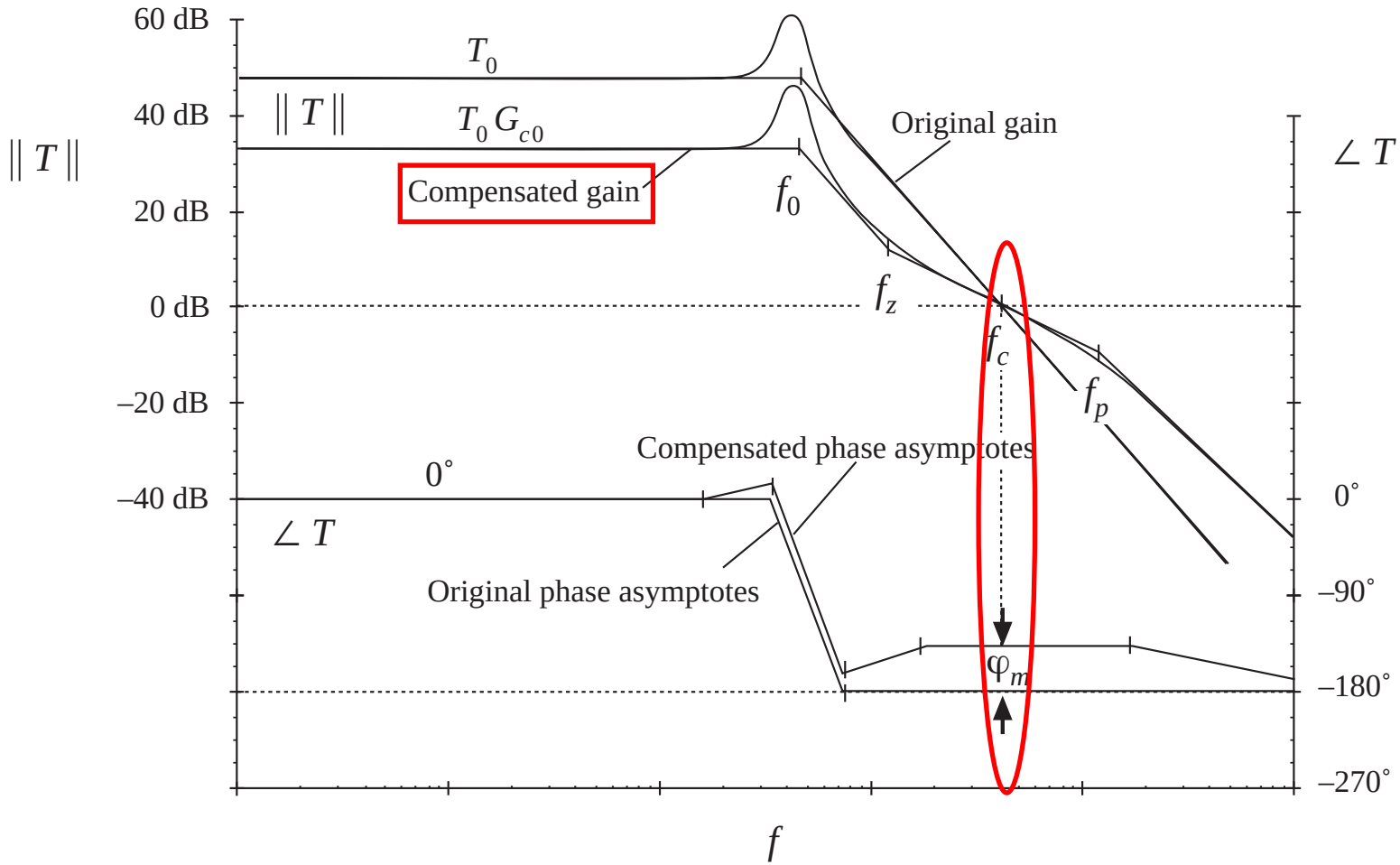

9.5.2. Lag (PI) compensation

Inverted zero

$$G_c(s) = G_{c\infty}\left(1 + \frac{\omega_L}{s}\right)$$

Improves low-frequency loop gain and regulation

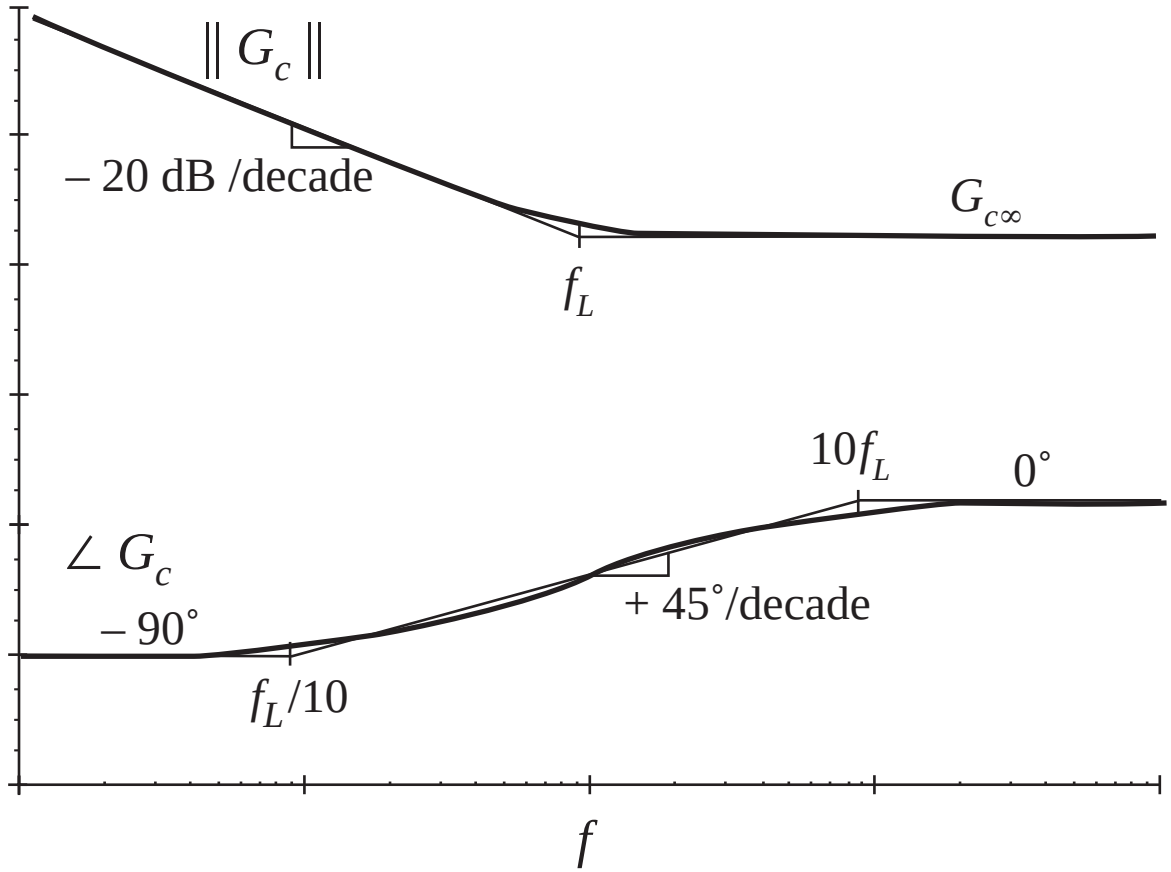

Example: lag compensation

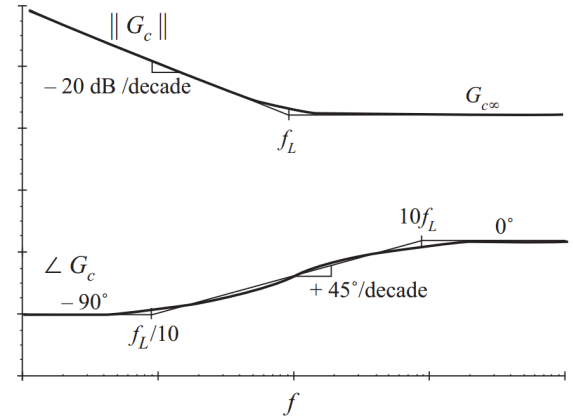

original (uncompensated) loop gain is

$$T_u(s) = \frac{T_{u0}}{\left(1 + \frac{s}{\omega_0}\right)}$$

compensator:

$$G_c(s) = G_{c\infty}\left(1 + \frac{\omega_L}{s}\right)$$

Design strategy: choose

$G_{c\infty}$ to obtain desired crossover frequency

ω_L sufficiently low to maintain adequate phase margin

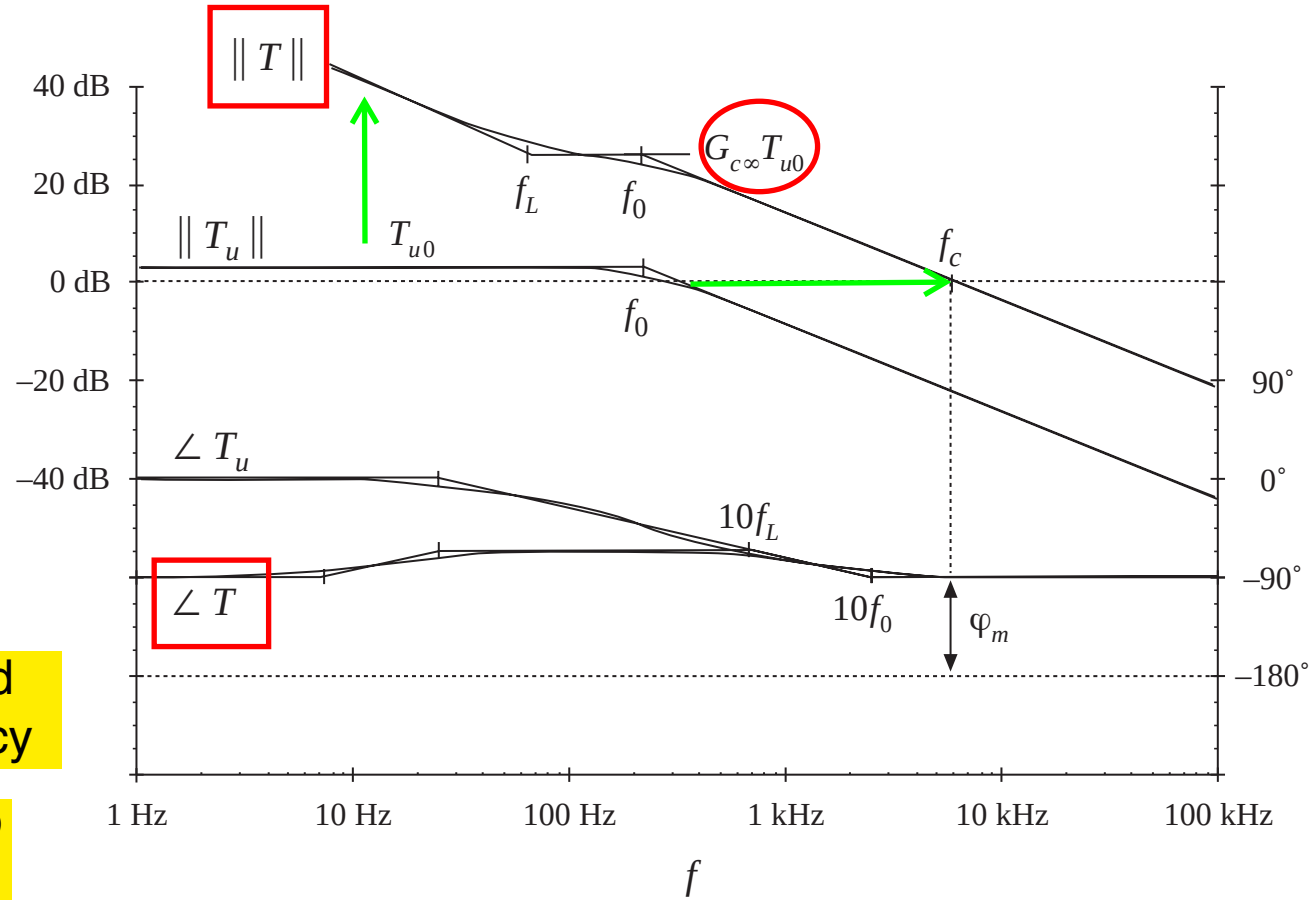

Example, continued

Construction of $1/(1+T)$*, lag compensator example:*

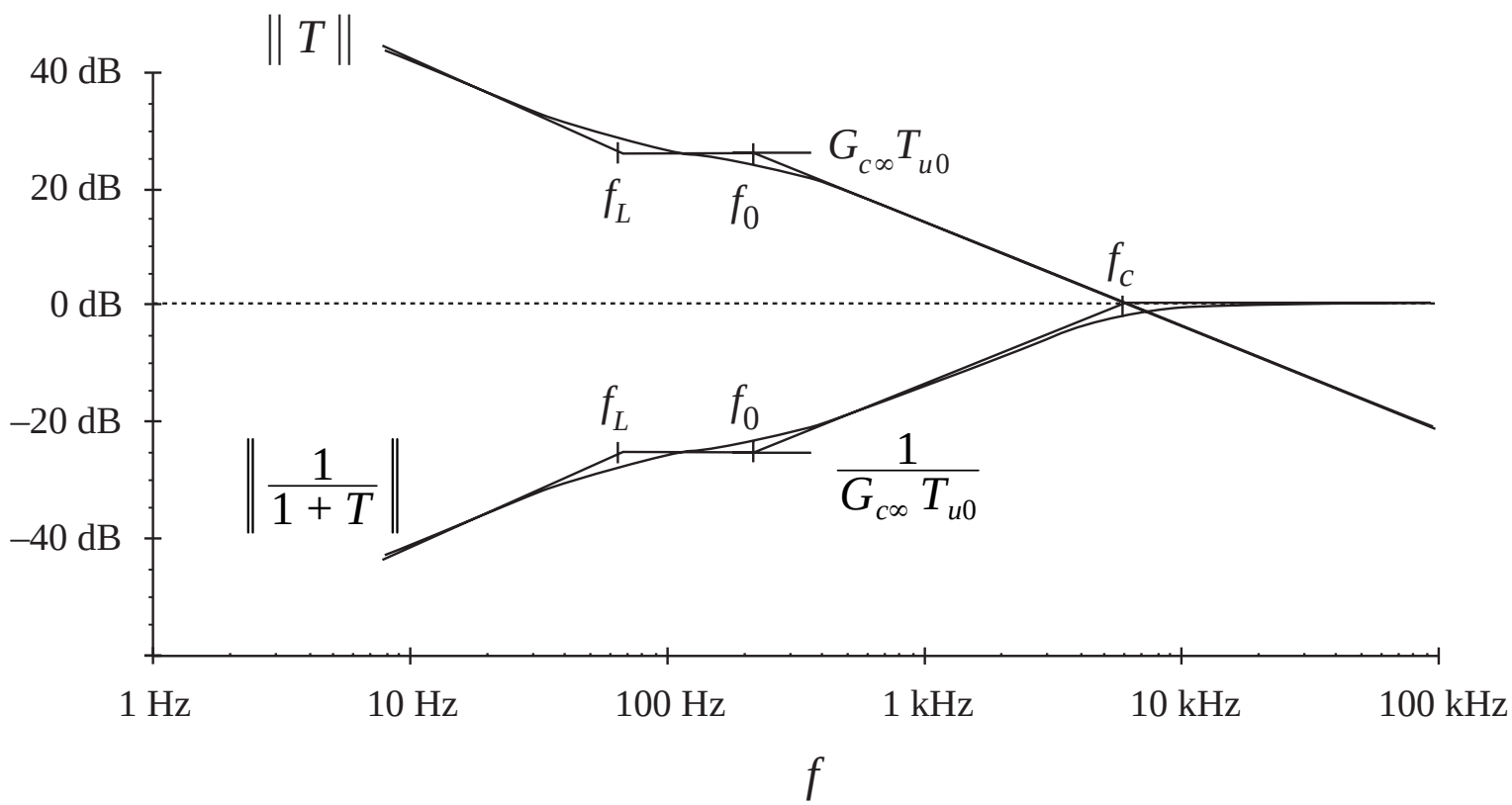

9.5.3. Combined (PID) compensator

$$G_c(s) = G_{cm} \frac{\left(1 + \frac{\omega_L}{s}\right)\left(1 + \frac{s}{\omega_z}\right)}{\left(1 + \frac{s}{\omega_{p1}}\right)\left(1 + \frac{s}{\omega_{p2}}\right)}$$

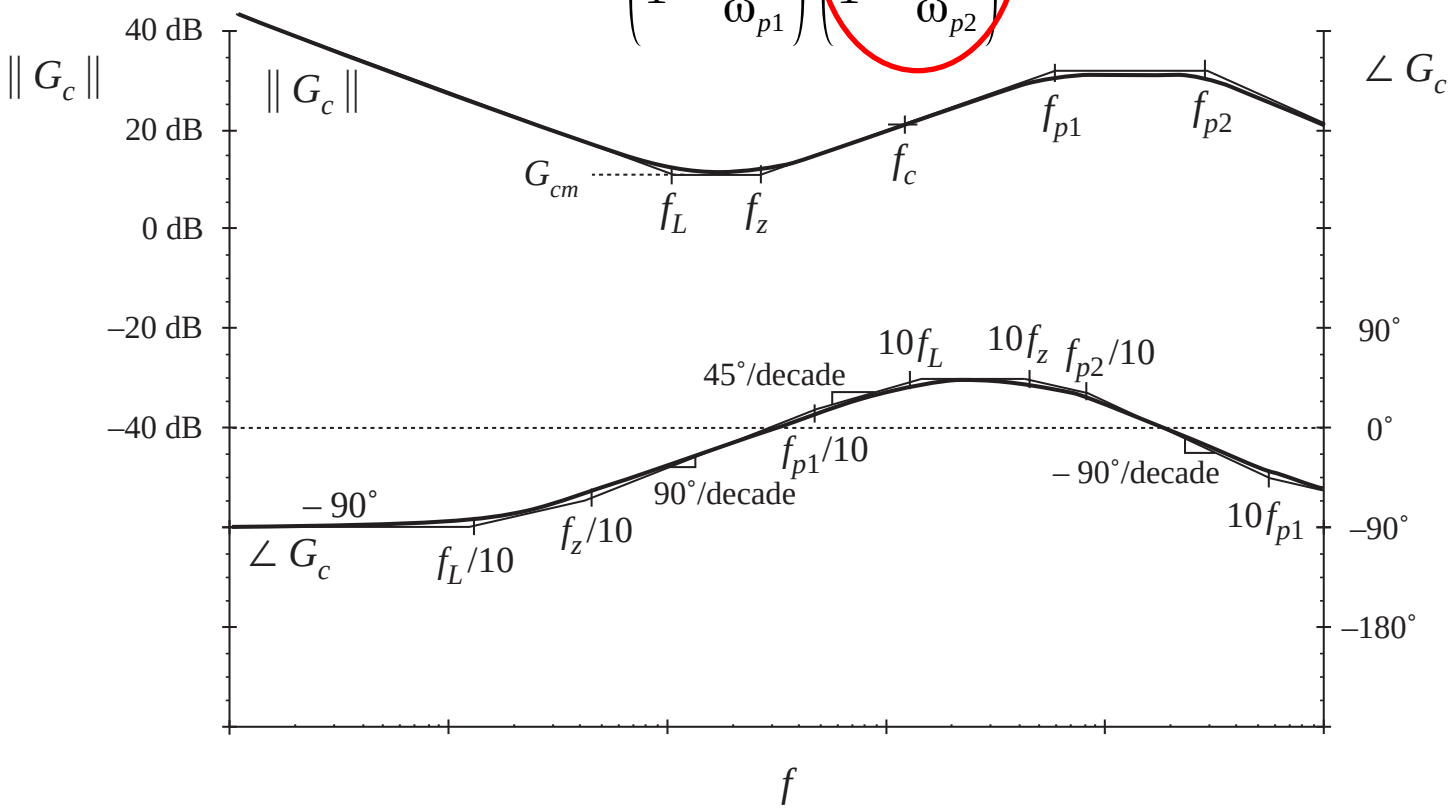

9.5.4. Design example

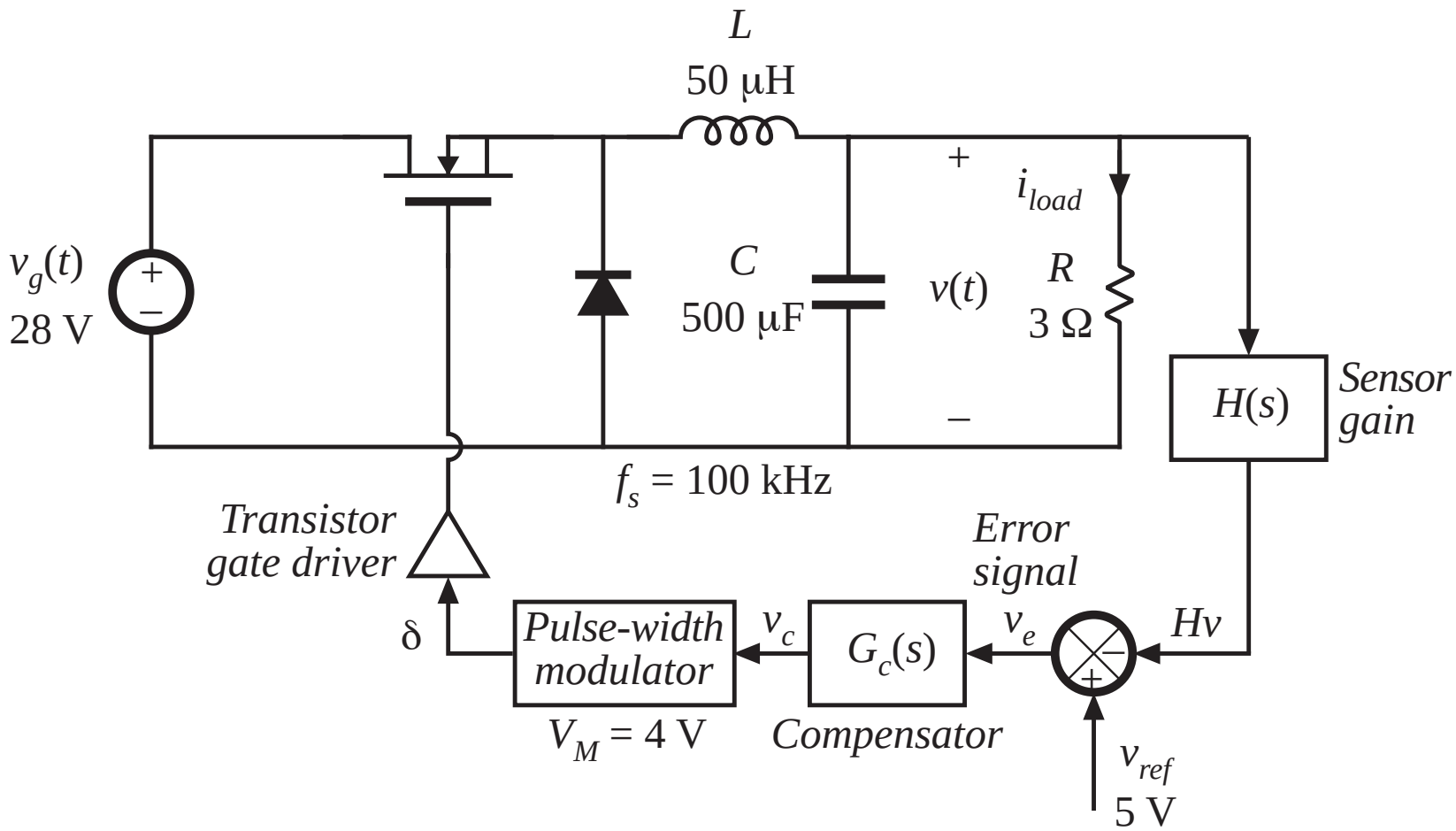

Quiescent operating point

Input voltage	$V_g = 28\text{V}$
Output	$V = 15\text{V},\ I_{load} = 5\text{A},\ R = 3\Omega$
Quiescent duty cycle	$D = 15/28 = 0.536$
Reference voltage	$V_{ref} = 5\text{V}$
Quiescent value of control voltage	$V_c = DV_M = 2.14\text{V}$
Gain $H(s)$	$H = V_{ref}/V = 5/15 = 1/3$

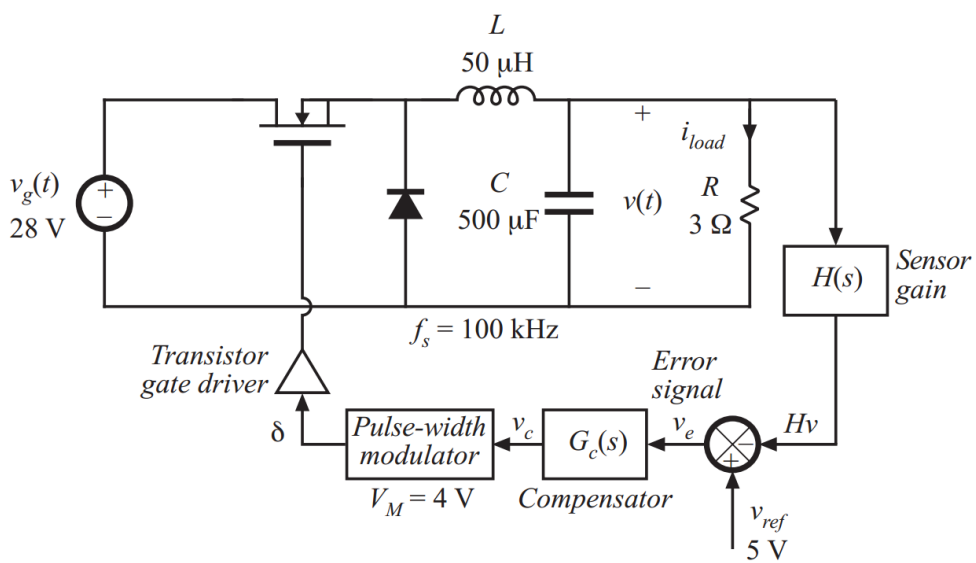

Small-signal model

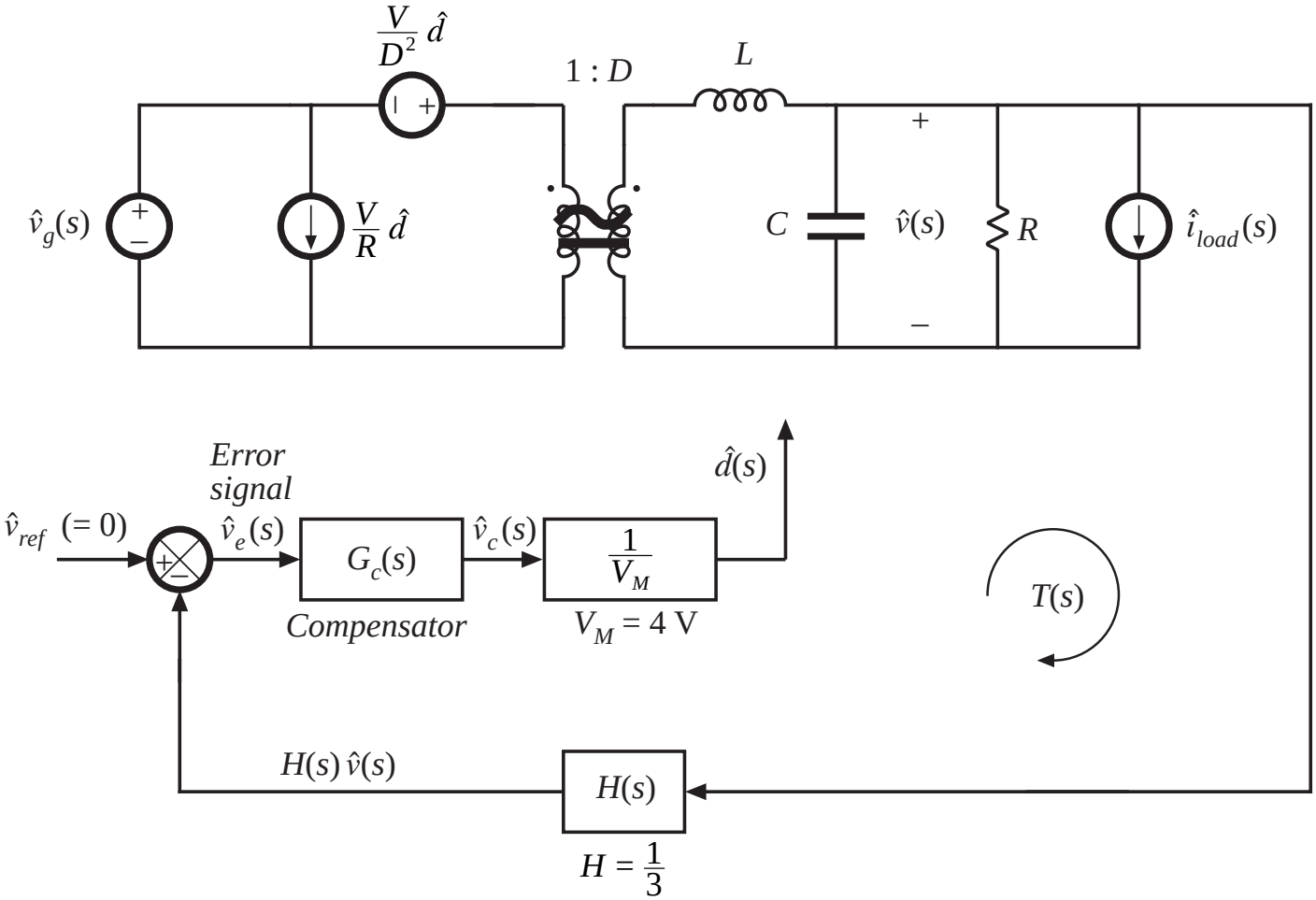

Open-loop control-to-output transfer function $G_{vd}(s)$

$$G_{vd}(s) = \frac{V}{D} \frac{1}{1 + s\frac{L}{R} + s^2 LC}$$

standard form:

$$G_{vd}(s) = G_{d0} \frac{1}{1 + \frac{s}{Q_0 \omega_0} + \left(\frac{s}{\omega_0}\right)^2}$$

salient features:

$$G_{d0} = \frac{V}{D} = 28\text{V}$$

$$f_0 = \frac{\omega_0}{2\pi} = \frac{1}{2\pi\sqrt{LC}} = 1\text{kHz}$$

$$Q_0 = R\sqrt{\frac{C}{L}} = 9.5 \Rightarrow 19.5\text{dB}$$

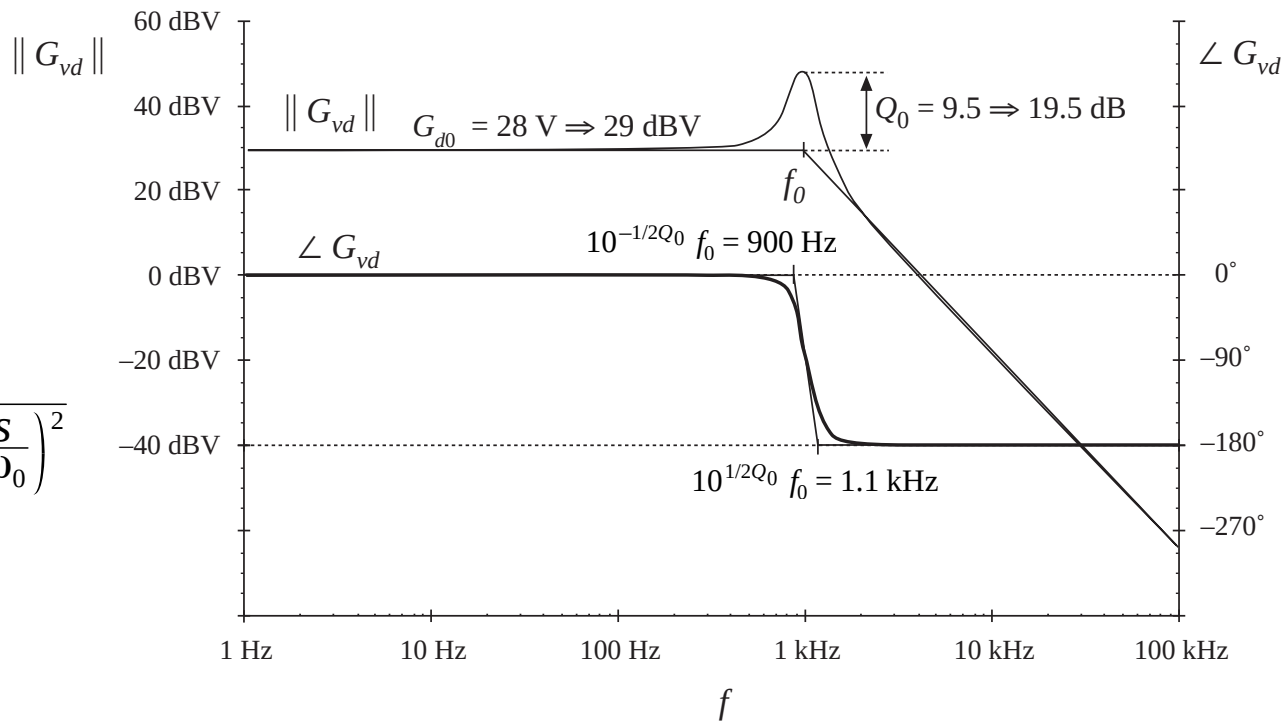

What is the phase margin?

Open-loop line-to-output transfer function and output impedance

Line to output transfer function

$$G_{vg}(s) = D \frac{1}{1 + s\frac{L}{R} + s^2 LC}$$

—same poles as control-to-output transfer function standard form:

$$G_{vg}(s) = G_{g0} \frac{1}{1 + \frac{s}{Q_0 \omega_0} + \left(\frac{s}{\omega_0}\right)^2}$$

Output impedance

$$Z_{out}(s) = R \parallel \frac{1}{sC} \parallel sL = \frac{sL}{1 + s\frac{L}{R} + s^2 LC}$$

System block diagram

$$T(s) = G_c(s)\left(\frac{1}{V_M}\right) G_{vd}(s)\, H(s)$$

$$T(s) = \frac{G_c(s)\, H(s)}{V_M}\, \frac{V}{D}\, \frac{1}{1 + \frac{s}{Q_0 \omega_0} + \left(\frac{s}{\omega_0}\right)^2}$$

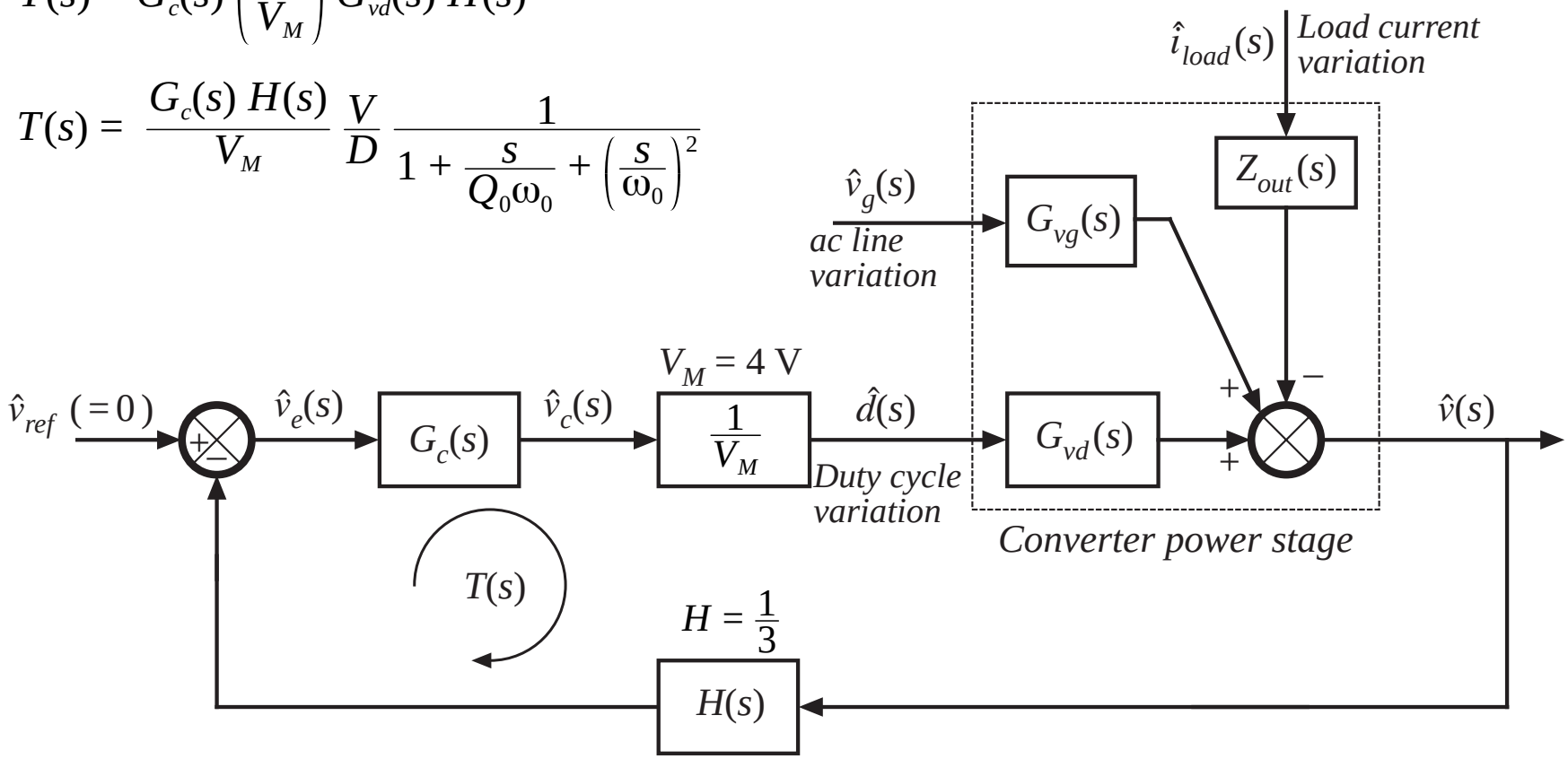

Uncompensated loop gain (with $G_c = 1$)

With $G_c = 1$, the loop gain is

$$T_u(s) = T_{u0} \frac{1}{1 + \frac{s}{Q_0 \omega_0} + \left(\frac{s}{\omega_0}\right)^2}$$

$$T_{u0} = \frac{H\,V}{D\,V_M} = 2.33 \Rightarrow 7.4\text{dB}$$

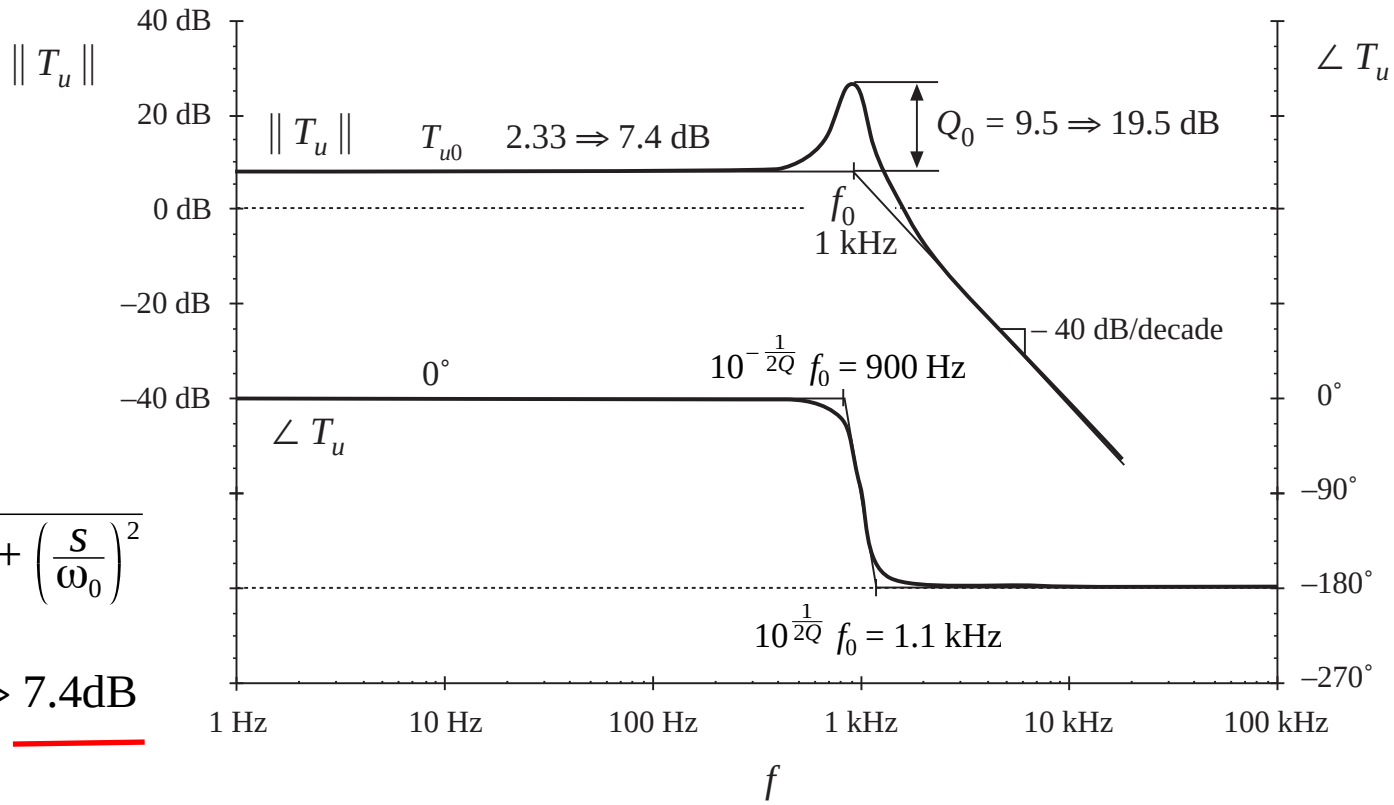

$f_c = 1.8$ kHz, $\varphi_m = 5^\circ$

Lead compensator

$$G_c(s) = G_{c0} \frac{\left(1 + \frac{s}{\omega_z}\right)}{\left(1 + \frac{s}{\omega_p}\right)} \qquad f_z = f_c \sqrt{\frac{1 - \sin(\theta)}{1 + \sin(\theta)}} \qquad f_p = f_c \sqrt{\frac{1 + \sin(\theta)}{1 - \sin(\theta)}}$$

Target:

- Obtain a crossover frequency of $5\ \text{kHz}$, with phase margin of 52°
- T_u has phase of approximately -180° at $5\ \text{kHz}$, hence lead (PD) compensator is needed to increase phase margin.
- Lead compensator should have phase of $+52^\circ$ at $5\ \text{kHz}$
- T_u has magnitude of $-20.6\ \text{dB}$ at $5\ \text{kHz}$
- Lead compensator gain should have magnitude of $+20.6\ \text{dB}$ at $5\ \text{kHz}$
- Lead compensator pole and zero frequencies should be

$$f_z = (5\text{kHz}) \sqrt{\frac{1 - \sin(52^\circ)}{1 + \sin(52^\circ)}} = 1.7\text{kHz}$$

$$f_p = (5\text{kHz}) \sqrt{\frac{1 + \sin(52^\circ)}{1 - \sin(52^\circ)}} = 14.5\text{kHz}$$

- Compensator dc gain should be $G_{c0} = \left(\frac{f_c}{f_0}\right)^2 \frac{1}{T_{u0}} \sqrt{\frac{f_z}{f_p}} = 3.7 \Rightarrow 11.3\text{dB}$

Lead compensator Bode plot

zero 1.7 kHz, pole 14.5 kHz, dc gain 11.3 dB

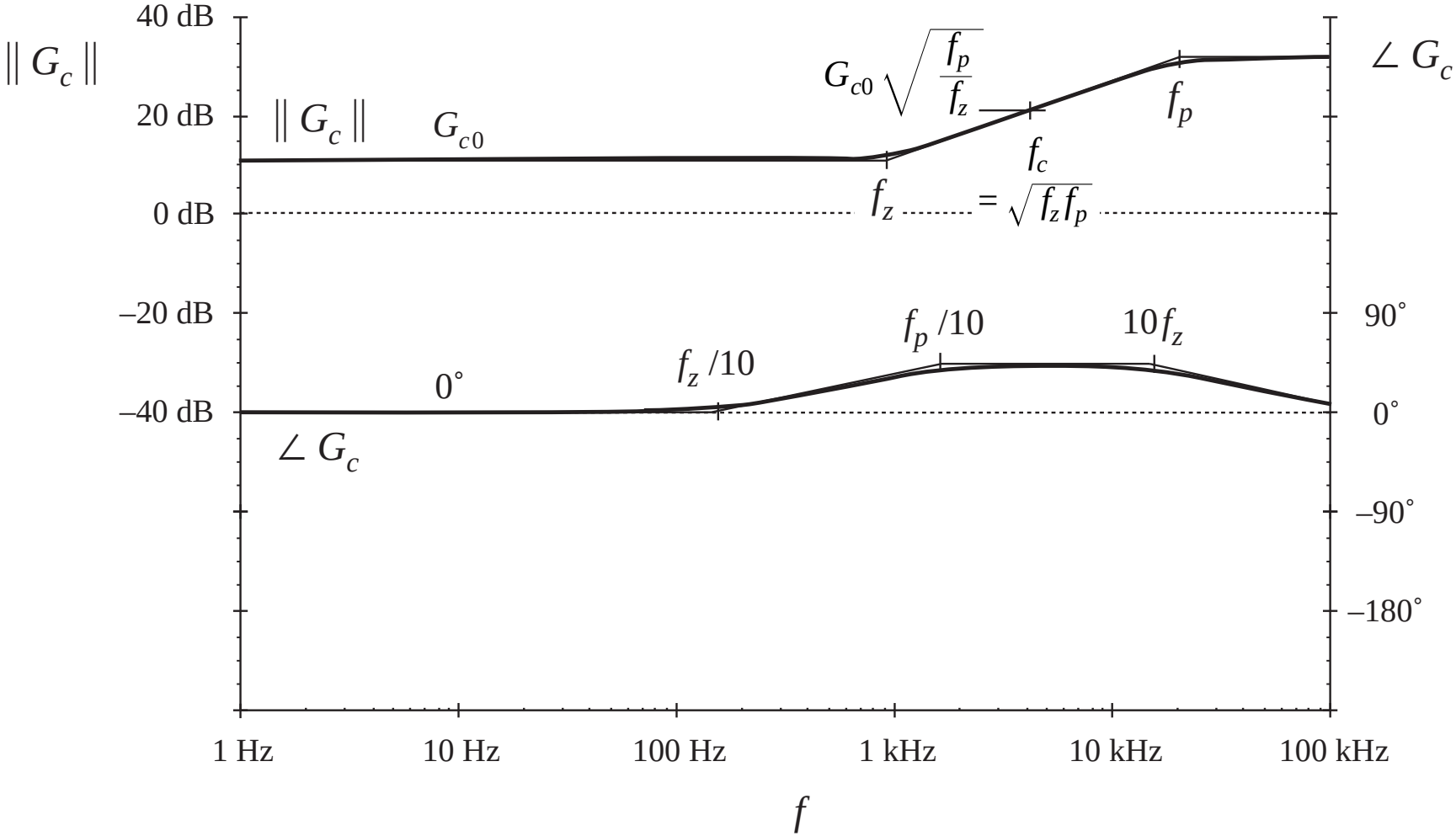

Loop gain, with lead compensator

$$T(s) = T_{u0}\, G_{c0} \frac{\left(1 + \frac{s}{\omega_z}\right)}{\left(1 + \frac{s}{\omega_p}\right)\left(1 + \frac{s}{Q_0\omega_0} + \left(\frac{s}{\omega_0}\right)^2\right)}$$

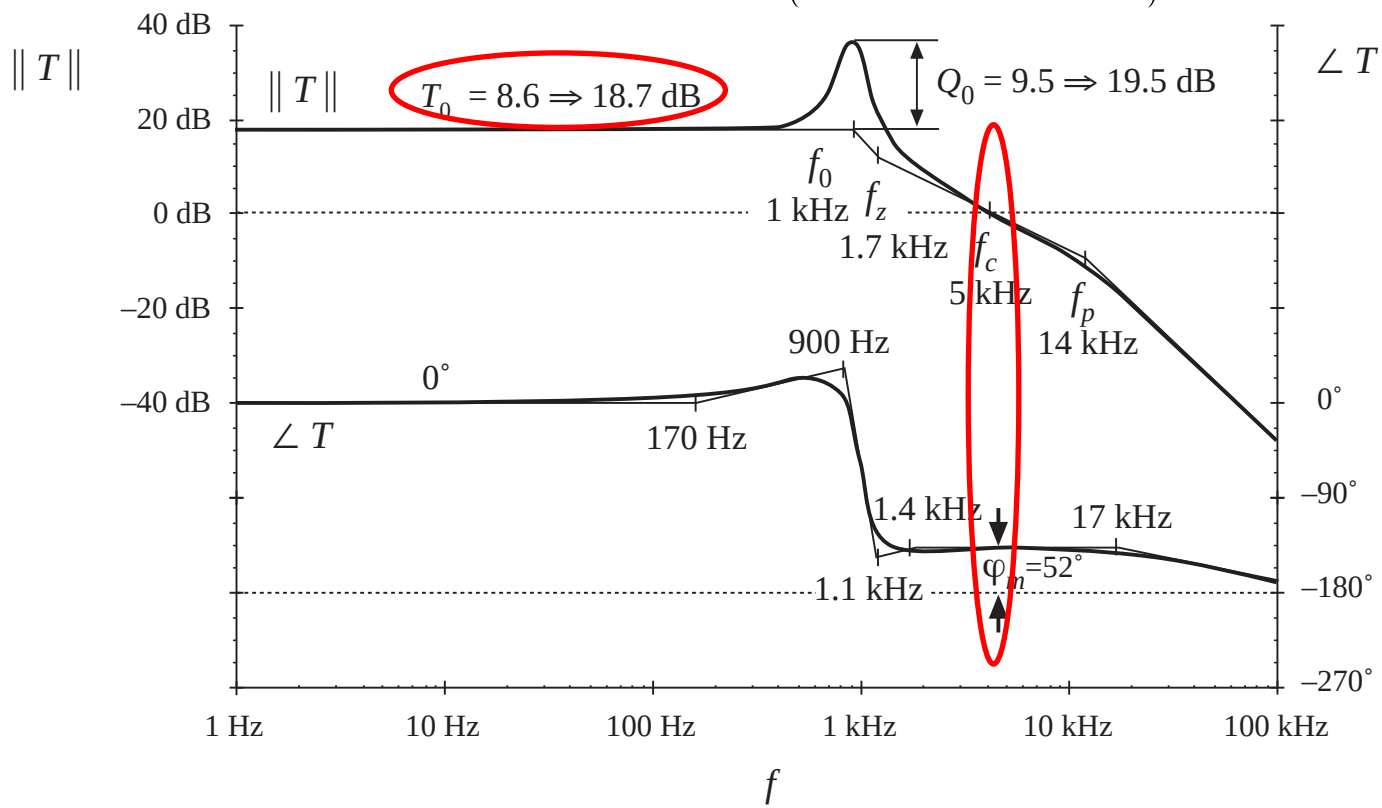

1/(1+T), with lead compensator

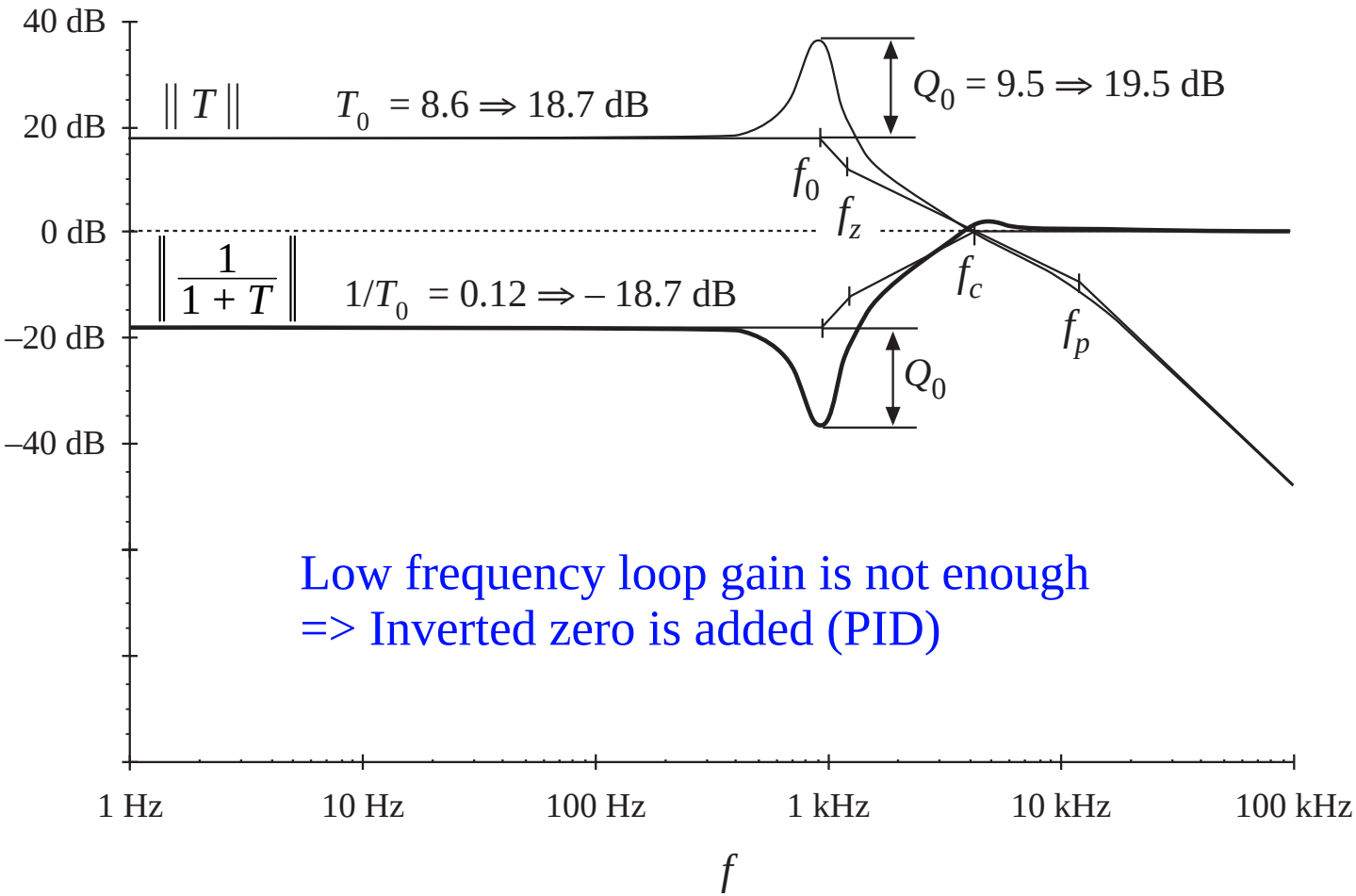

Low frequency loop gain is not enough
=> Inverted zero is added (PID)

Improved compensator (PID)

$$G_c(s) = G_{cm} \frac{\left(1 + \frac{s}{\omega_z}\right)\boxed{\left(1 + \frac{\omega_L}{s}\right)}}{\left(1 + \frac{s}{\omega_p}\right)}$$

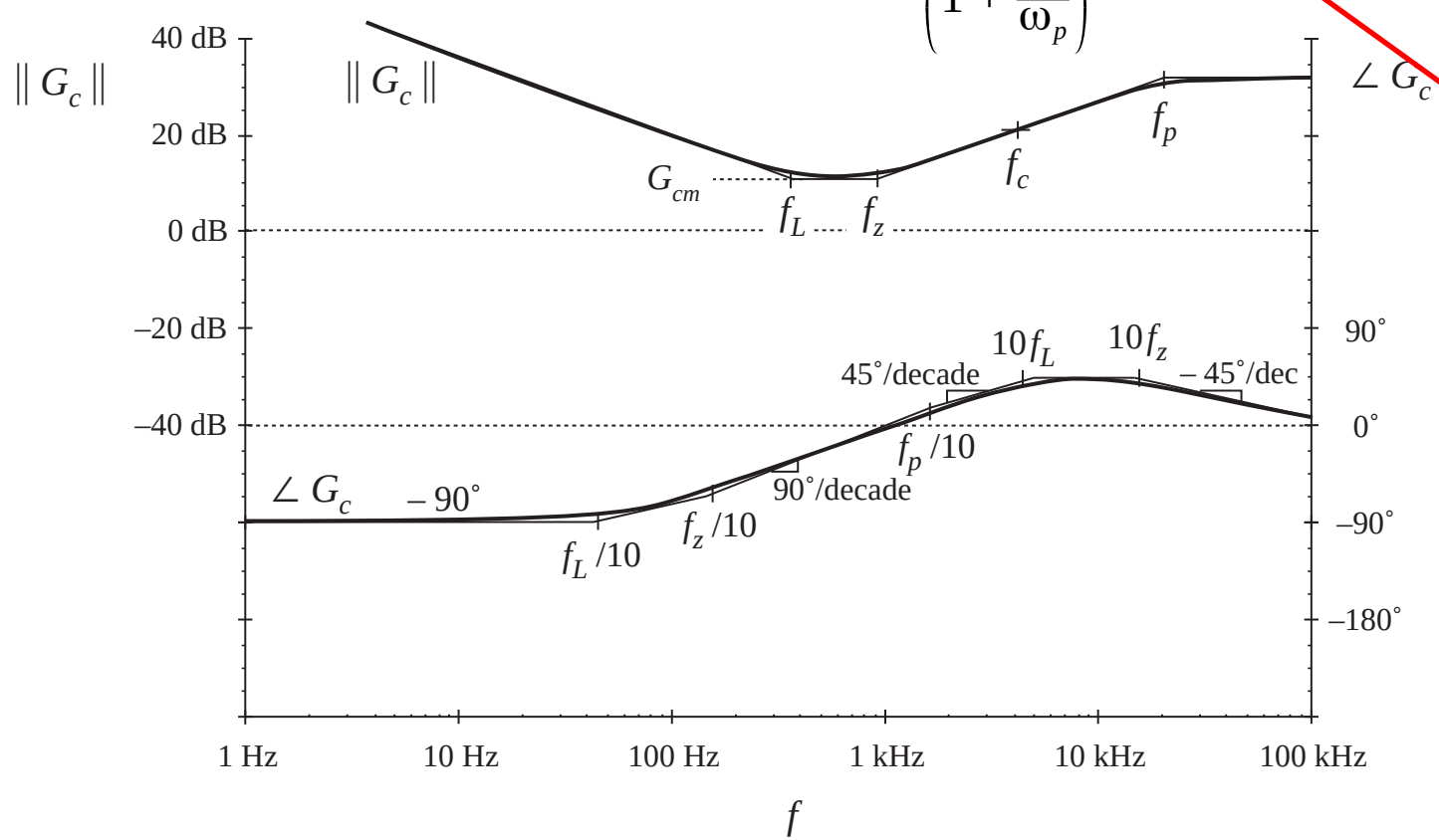

- add inverted zero to PD compensator, without changing dc gain or corner frequencies
- choose f_L to be $f_c/10$, so that phase margin is unchanged

$T(s)$ and $1/(1+T(s))$, with PID compensator

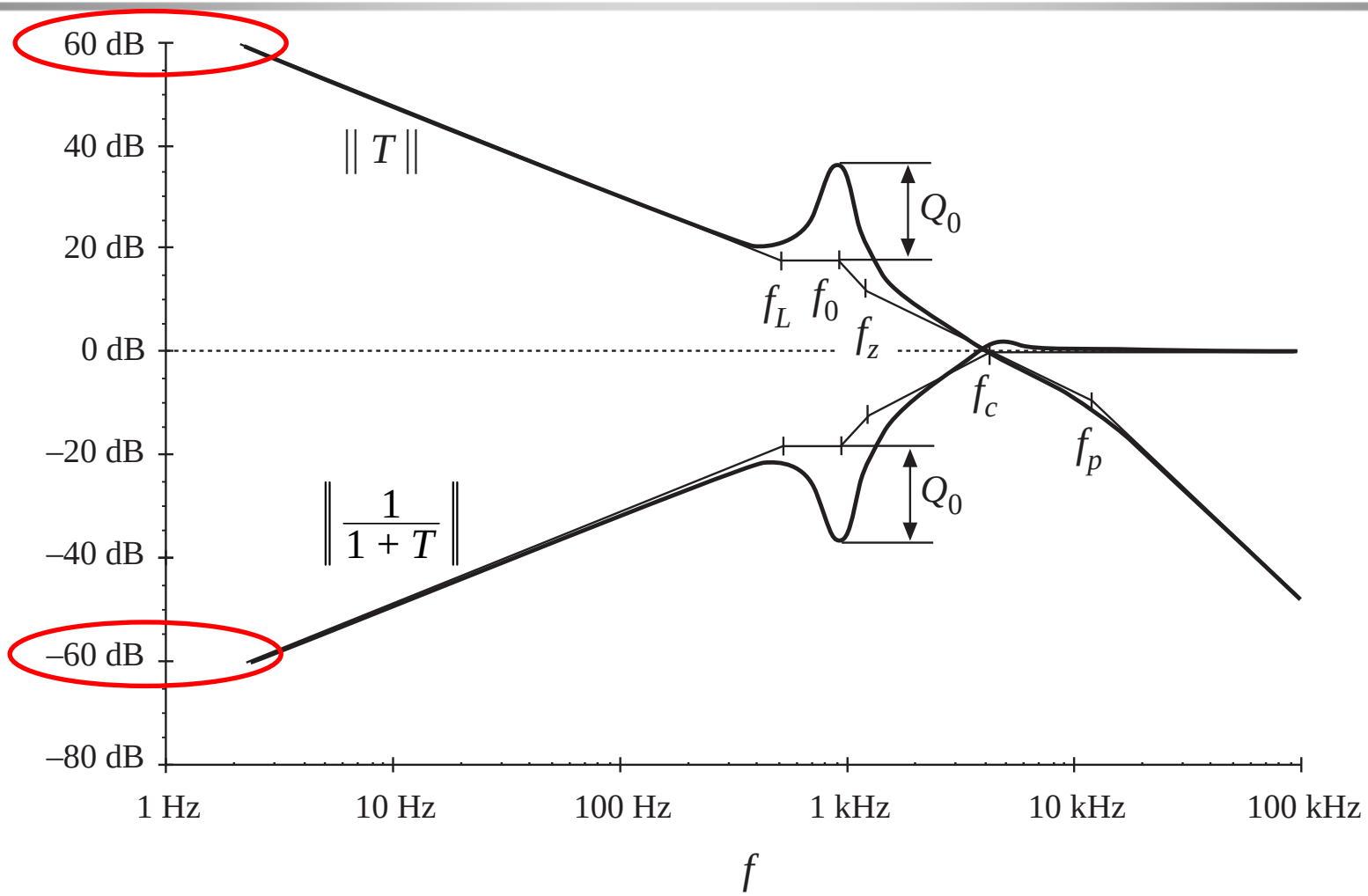

Line-to-output transfer function

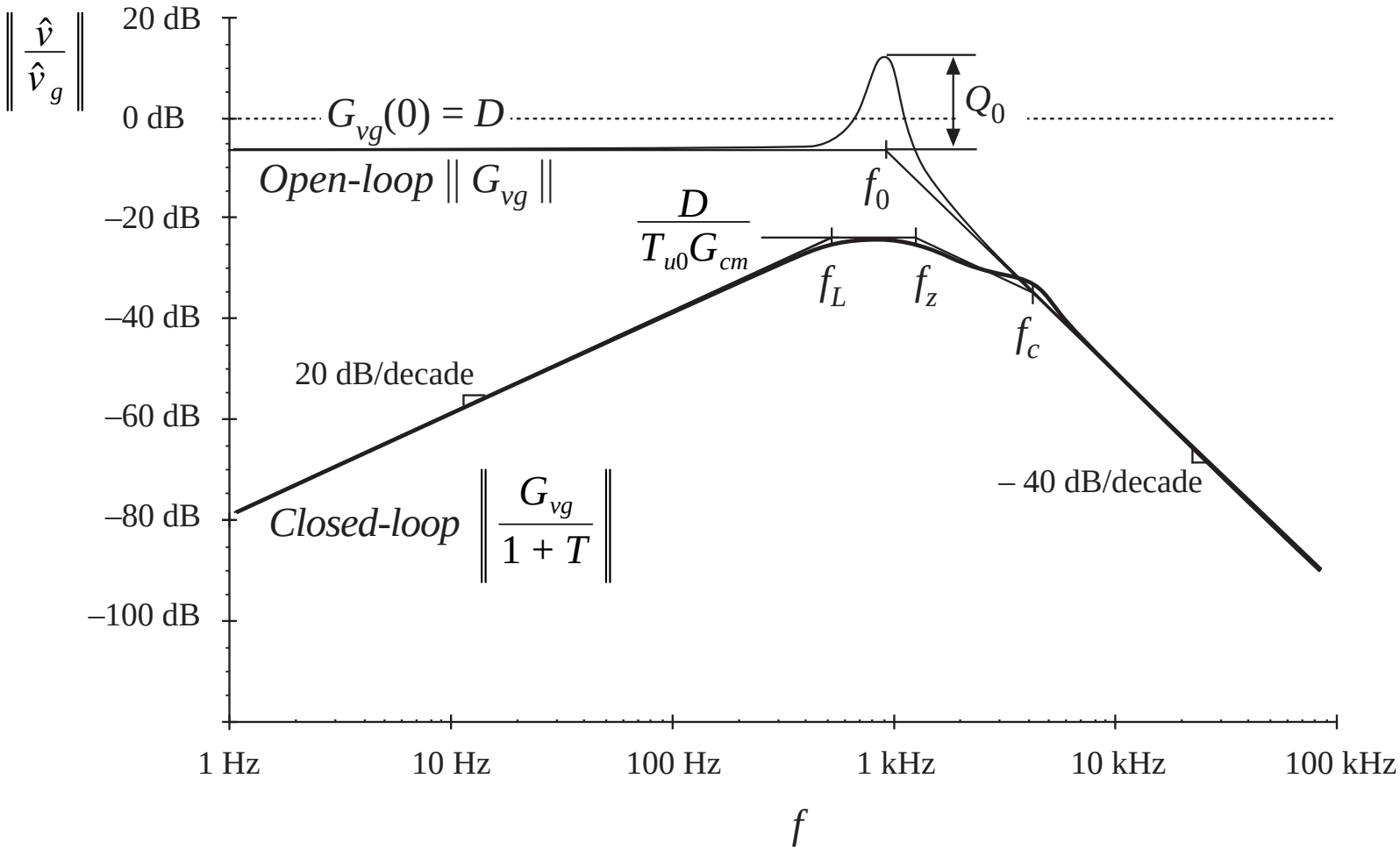

Low frequency line perturbation is well suppressed

9.6. Measurement of loop gains

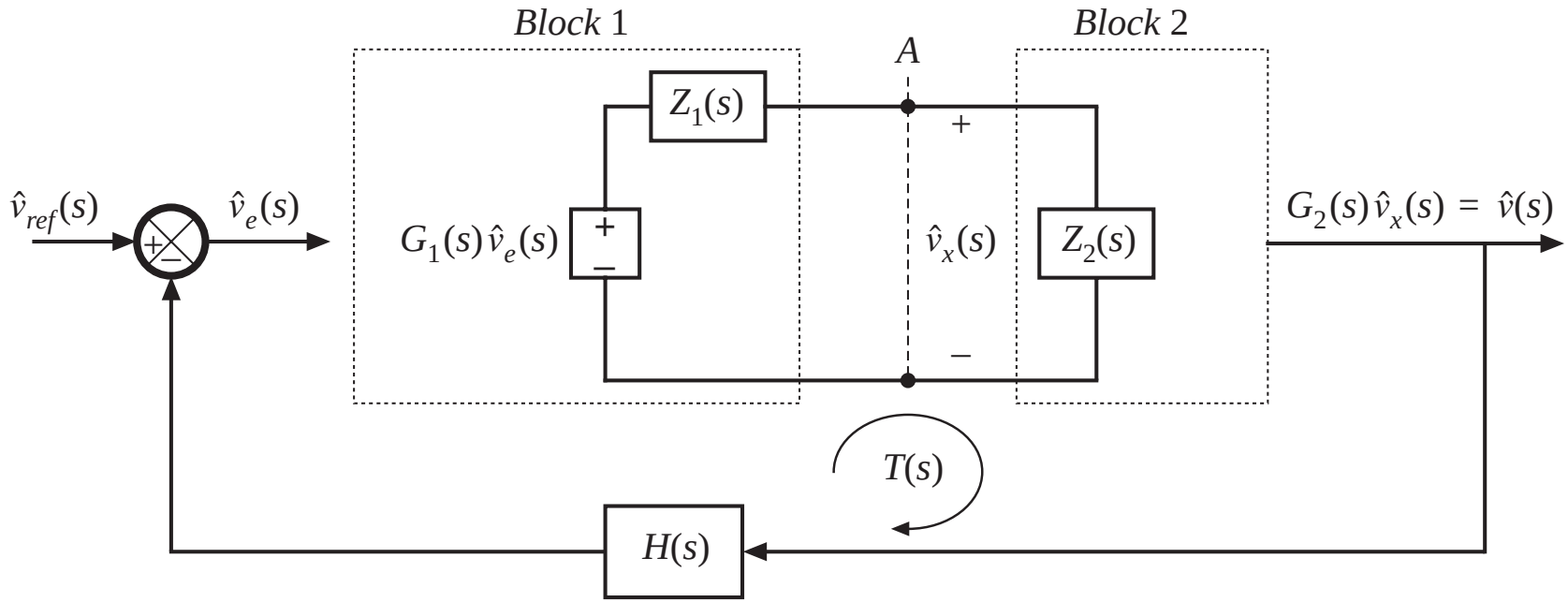

Objective: experimentally determine loop gain $T(s)$, by making measurements at point A

Correct result is

$$T(s) = G_1(s) \left(\frac{Z_2(s)}{Z_1(s) + Z_2(s)} \right) G_2(s)\, H(s)$$

Conventional approach: break loop, measure $T(s)$ as conventional transfer function

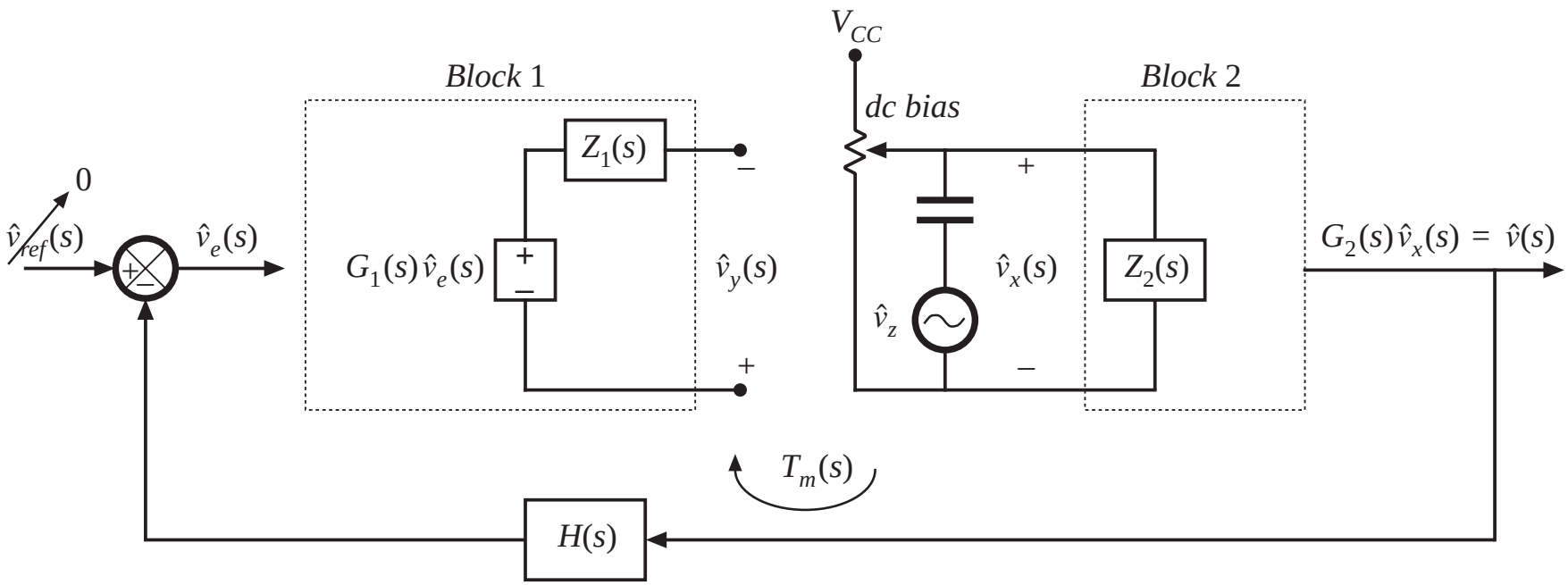

measured gain is

$$T_m(s) = \left.\frac{\hat{v}_y(s)}{\hat{v}_x(s)}\right|_{\substack{\hat{v}_{ref}=0 \\ \hat{v}_g=0}}$$

$$\boxed{T_m(s) = G_1(s)\, G_2(s)\, H(s)}$$

Measured vs. actual loop gain

Actual loop gain:

$$T(s) = G_1(s) \left(\frac{Z_2(s)}{Z_1(s) + Z_2(s)} \right) G_2(s)\, H(s)$$

Measured loop gain:

$$T_m(s) = G_1(s)\, G_2(s)\, H(s)$$

Express T_m as function of T:

$$T_m(s) = T(s) \left(1 + \frac{Z_1(s)}{Z_2(s)} \right)$$

$$T_m(s) \approx T(s) \quad \text{provided that} \quad \| Z_2 \| >> \| Z_1 \|$$

Discussion

Issue 1 • Breaking the loop disrupts the loading of block 2 on block 1.

A suitable injection point must be found, where loading is not significant.

Issue 2 • Breaking the loop disrupts the dc biasing and quiescent operating point.

A potentiometer must be used, to correctly bias the input to block 2.

In the common case where the dc loop gain is large, it is very difficult to correctly set the dc bias.

- It would be desirable to avoid breaking the loop, such that the biasing circuits of the system itself set the quiescent operating point.

9.6.1. Voltage injection

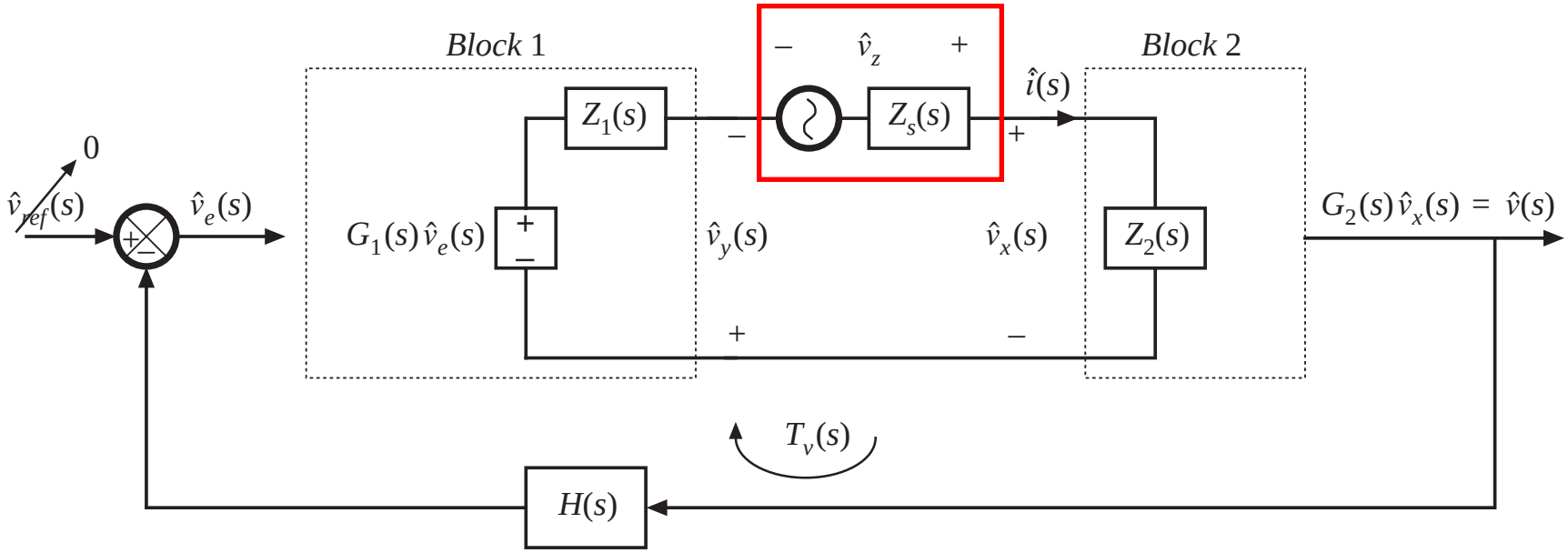

- Ac injection source v_z is connected between blocks 1 and 2
- Dc bias is determined by biasing circuits of the system itself
- Injection source does modify loading of block 2 on block 1

Voltage injection: measured transfer function $T_v(s)$

Network analyzer measures

$$T_v(s) = \left.\frac{\hat{v}_y(s)}{\hat{v}_x(s)}\right|_{\substack{\hat{v}_{ref}=0 \\ \hat{v}_g=0}}$$

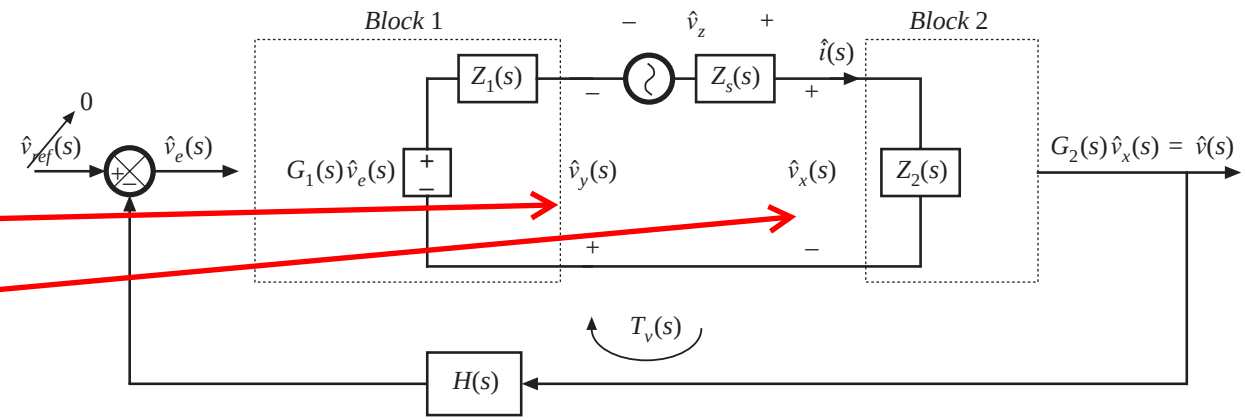

Solve block diagram:

$$\hat{v}_e(s) = -H(s)\,G_2(s)\,\hat{v}_x(s)$$

$$-\hat{v}_y(s) = G_1(s)\,\hat{v}_e(s) - \hat{i}(s)\,Z_1(s)$$

Hence

$$-\hat{v}_y(s) = -\hat{v}_x(s)\,G_2(s)\,H(s)\,G_1(s) - \hat{i}(s)\,Z_1(s)$$

with

$$\hat{i}(s) = \frac{\hat{v}_x(s)}{Z_2(s)}$$

Substitute:

$$\hat{v}_y(s) = \hat{v}_x(s)\left(G_1(s)\,G_2(s)\,H(s) + \frac{Z_1(s)}{Z_2(s)}\right)$$

which leads to the measured gain

$$T_v(s) = G_1(s)\,G_2(s)\,H(s) + \frac{Z_1(s)}{Z_2(s)}$$

Comparison of $T_v(s)$ with $T(s)$

Actual loop gain is

$$T(s) = G_1(s) \left(\frac{Z_2(s)}{Z_1(s) + Z_2(s)} \right) G_2(s)\, H(s)$$

Gain measured via voltage injection:

$$T_v(s) = G_1(s)\, G_2(s)\, H(s) + \frac{Z_1(s)}{Z_2(s)}$$

Express $Tv(s)$ in terms of $T(s)$:

$$T_v(s) = T(s) \left(1 + \frac{Z_1(s)}{Z_2(s)} \right) + \frac{Z_1(s)}{Z_2(s)}$$

Condition for accurate measurement:

$$T_v(s) \approx T(s) \quad \text{provided} \quad (i) \quad \| Z_1(s) \| << \| Z_2(s) \|, \quad \text{and}$$

$$(ii) \quad \| T(s) \| >> \left\| \frac{Z_1(s)}{Z_2(s)} \right\|$$

Example: voltage injection

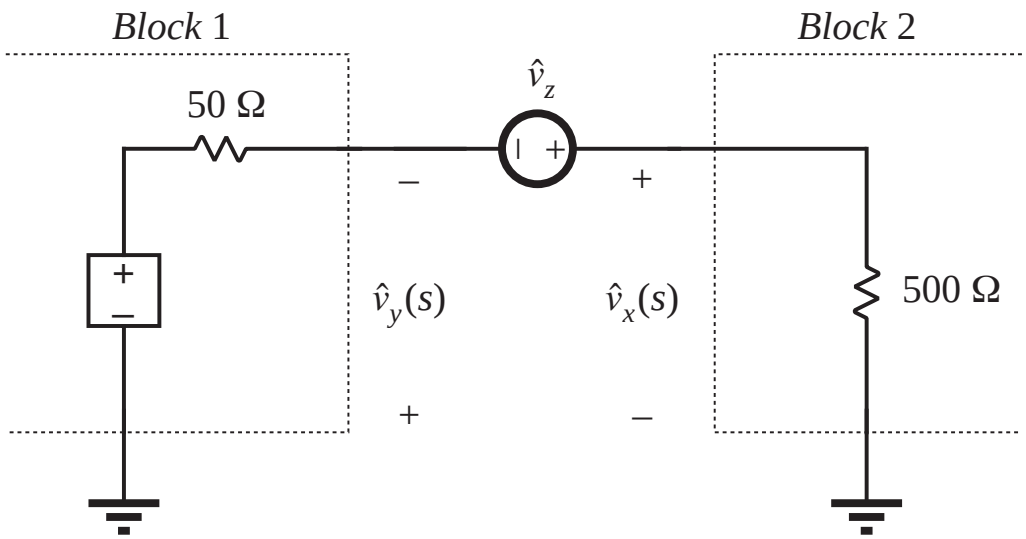

$$Z_1(s) = 50\Omega$$

$$Z_2(s) = 500\Omega$$

$$\frac{Z_1(s)}{Z_2(s)} = 0.1 \Rightarrow -20\text{dB}$$

$$\left(1 + \frac{Z_1(s)}{Z_2(s)}\right) = 1.1 \Rightarrow 0.83\text{dB}$$

$$\text{suppose actual } T(s) = \frac{10^4}{\left(1 + \frac{s}{2\pi\ 10\text{Hz}}\right)\left(1 + \frac{s}{2\pi\ 100\text{kHz}}\right)}$$

Example: measured $T_v(s)$ and actual $T(s)$

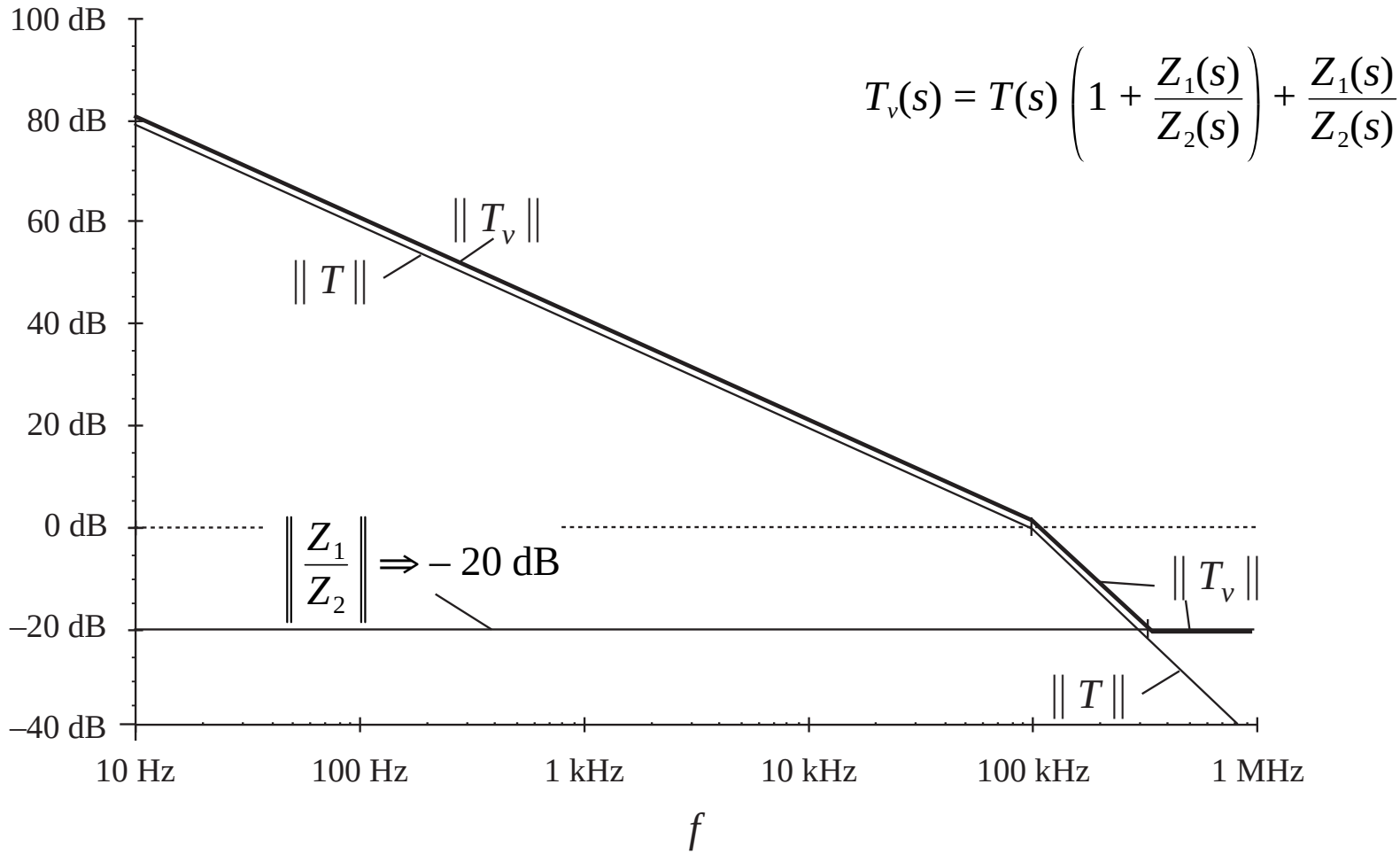

$$T_v(s) = T(s)\left(1 + \frac{Z_1(s)}{Z_2(s)}\right) + \frac{Z_1(s)}{Z_2(s)}$$

9.6.2. Current injection

$$T_i(s) = \left.\frac{\hat{i}_y(s)}{\hat{i}_x(s)}\right|_{\substack{\hat{v}_{ref} = 0 \\ \hat{v}_g = 0}}$$

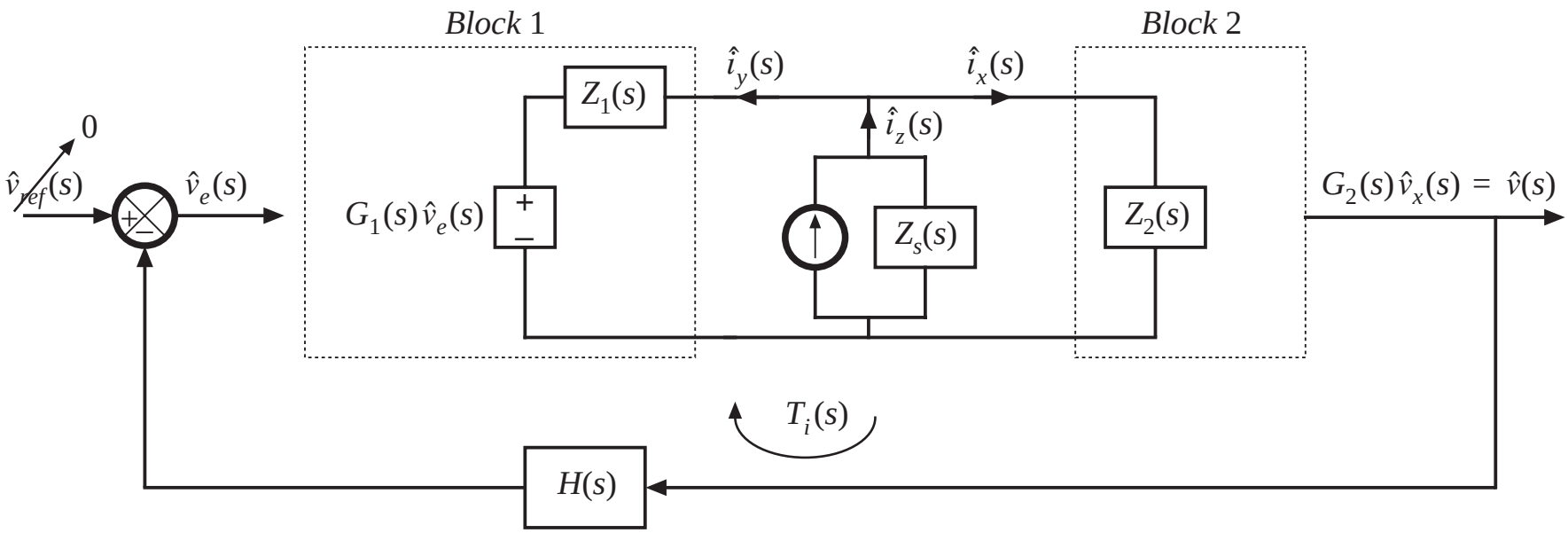

Current injection

It can be shown that

$$T_i(s) = T(s)\left(1 + \frac{Z_2(s)}{Z_1(s)}\right) + \frac{Z_2(s)}{Z_1(s)}$$

Conditions for obtaining accurate measurement:

$$(i) \quad \| Z_2(s) \| << \| Z_1(s) \|, \quad \text{and}$$

$$(ii) \quad \| T(s) \| >> \left\| \frac{Z_2(s)}{Z_1(s)} \right\|$$

Injection source impedance Z_s is irrelevant. We could inject using a Thevenin-equivalent voltage source:

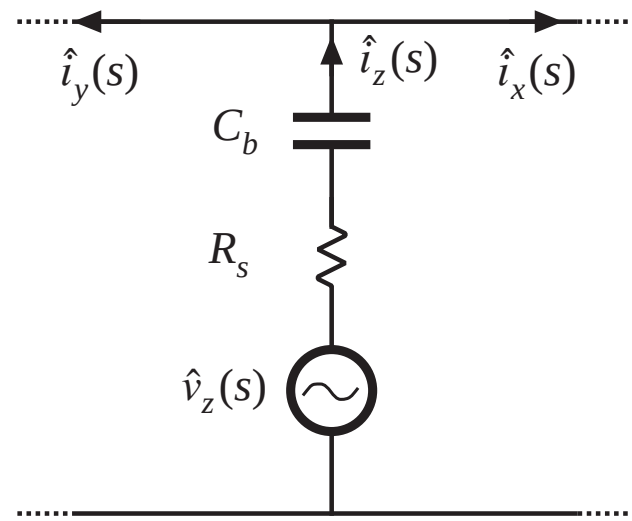

9.6.3. Measurement of unstable systems
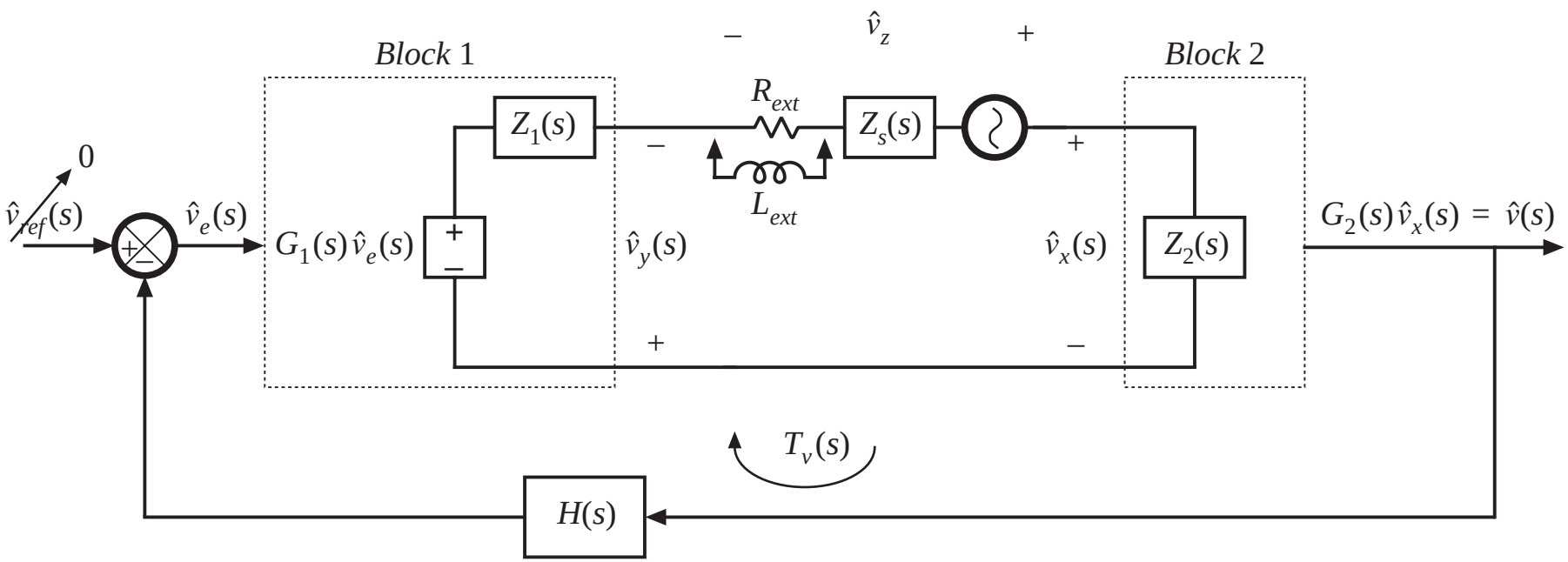
- Injection source impedance Z_s does not affect measurement
- Increasing Z_s reduces loop gain of circuit, tending to stabilize system
- Original (unstable) loop gain is measured (not including Z_s), while circuit operates stably